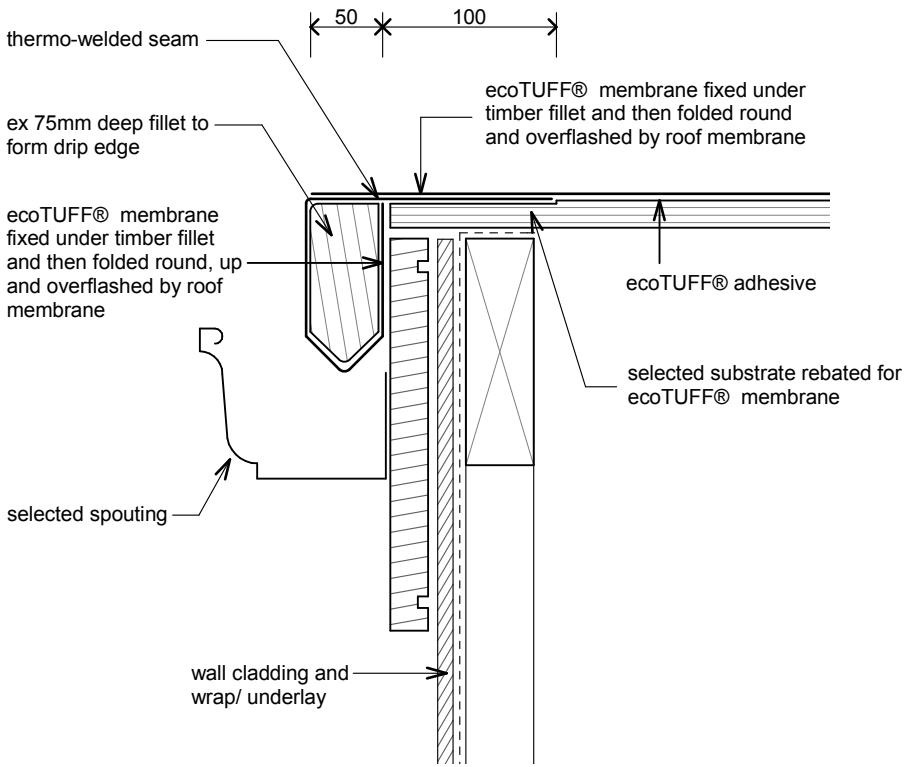

ecoT01 - External gutter type 1

Revision: 18 July 2014