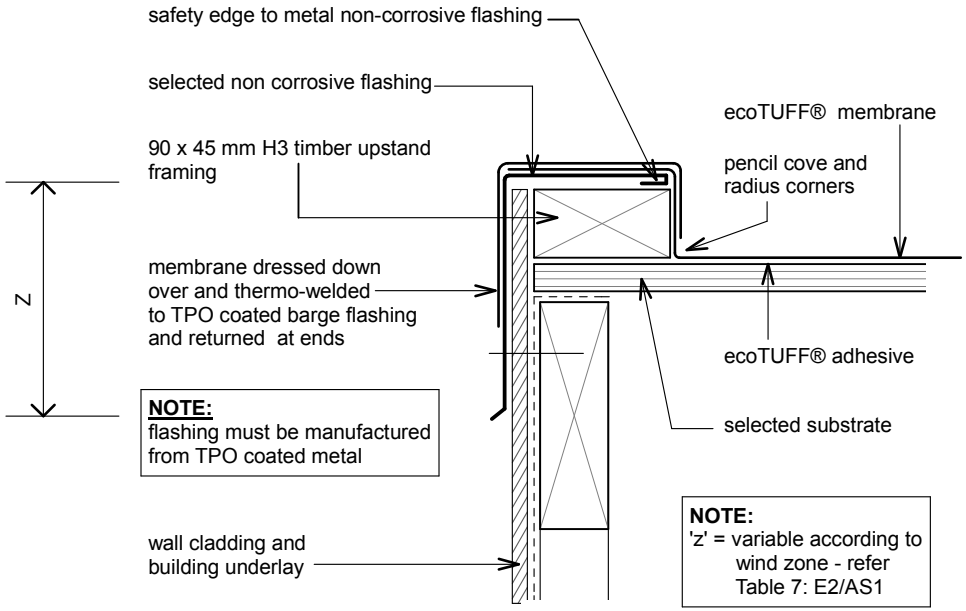

ecoT03 - Barge Board 1

Revision: 18 July 2014