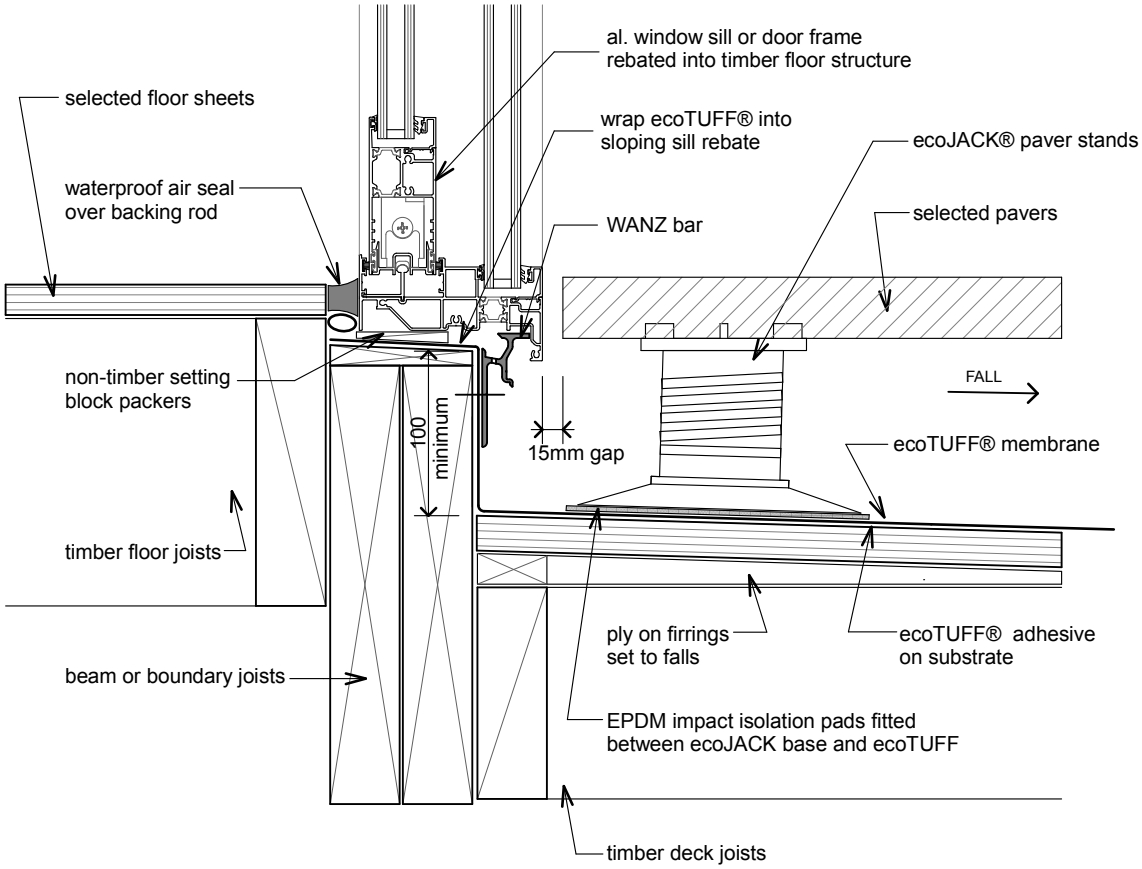

ecoT27 - ecoJACK® paver-threshold detail - type 1

Revision: 18 July 2014