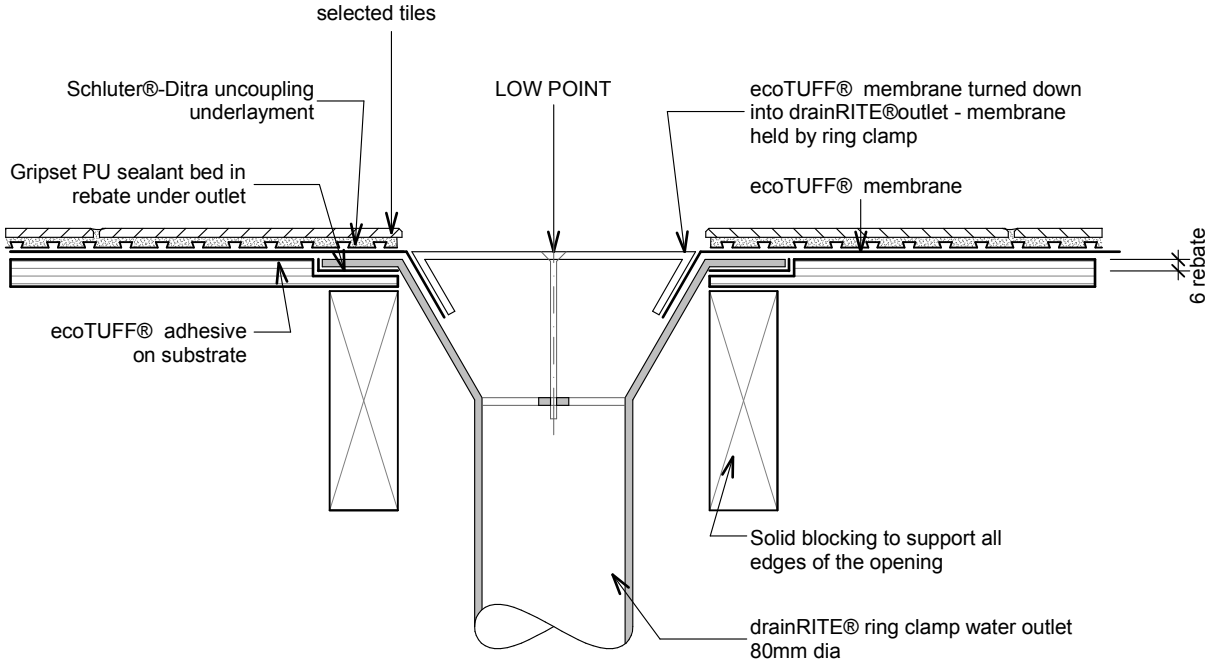

ecoT35 - drainRITE® Water Outlet 2 - ring clamped

Revision: 17 Sept 2014