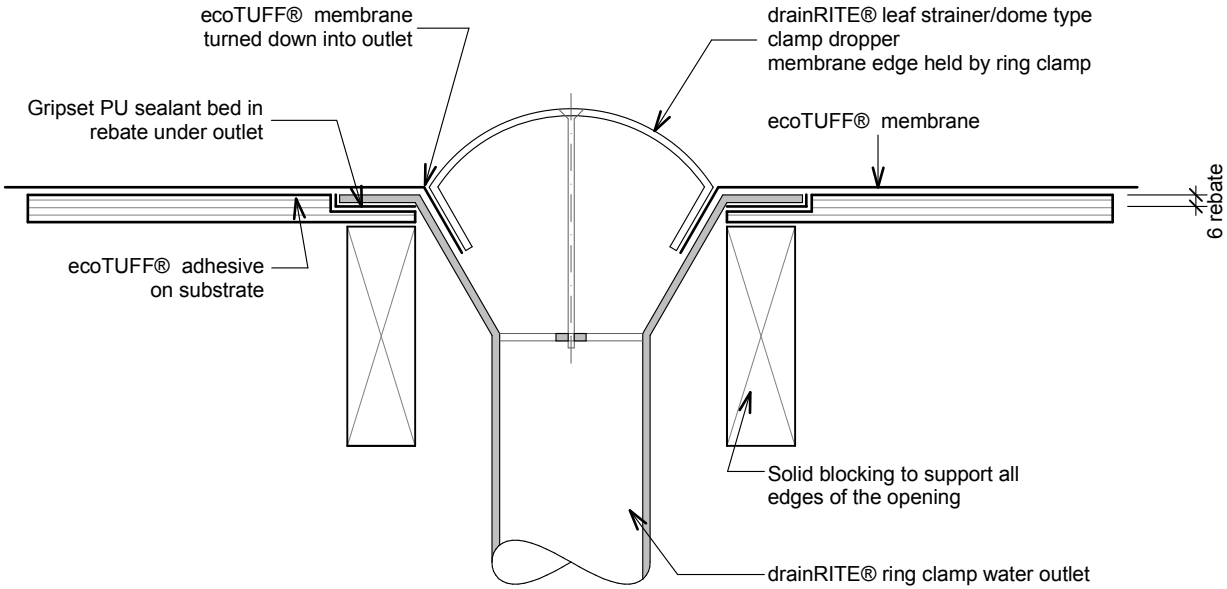

ecoT36 - drainRITE® Water Outlet 3 - ring clamped dome

Revision: 17 Sept 2014