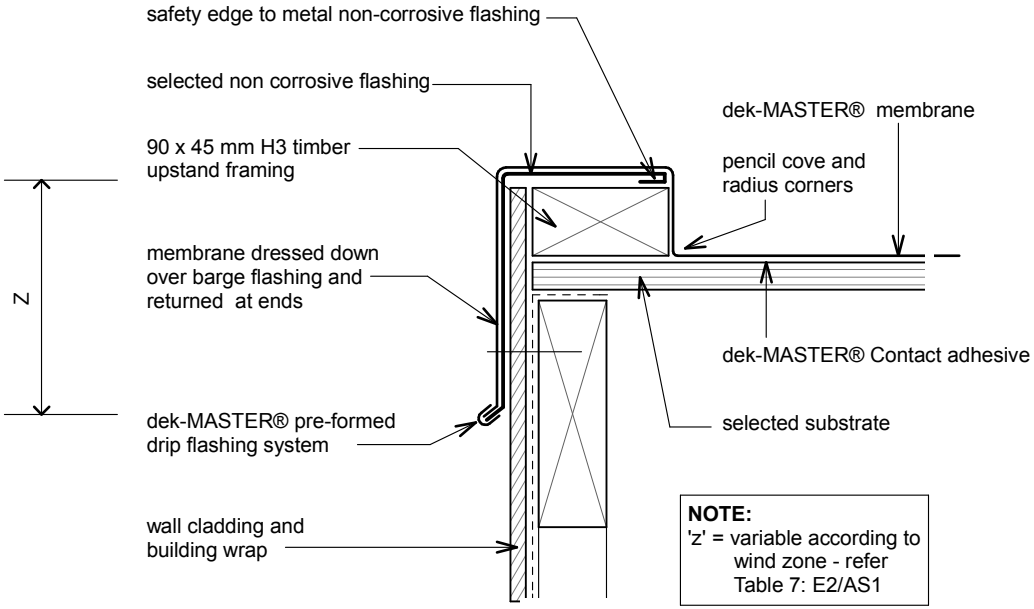

dek-M03 - Barge Board 1

REVISION: 28 July 2014