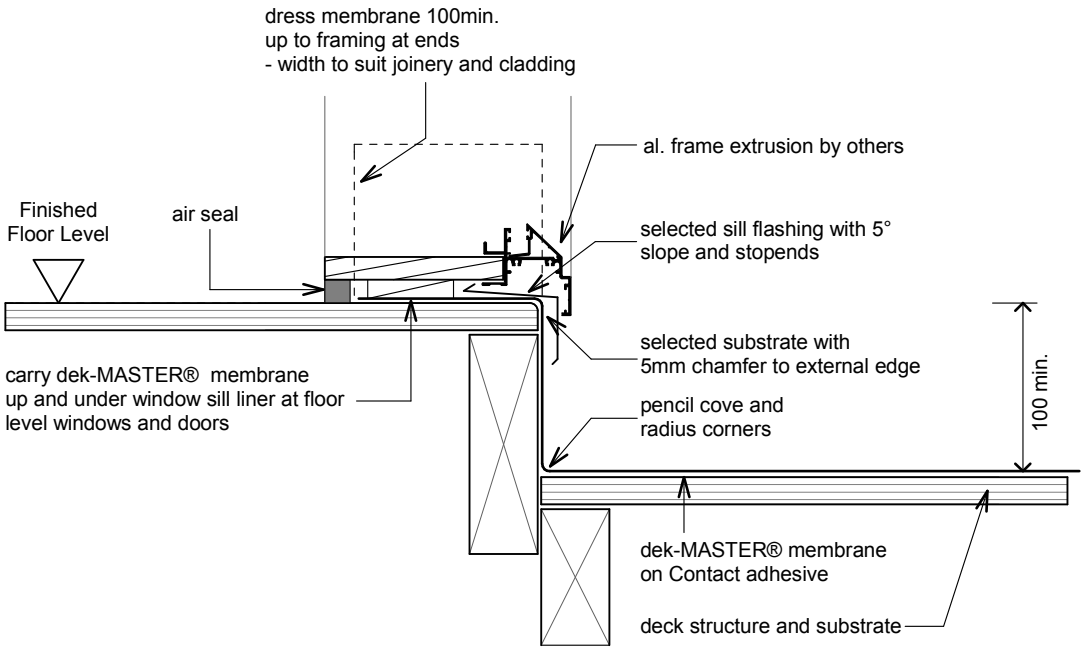

dek-M25 - Deck Al. Threshold 1

REVISION: 28 July 2014