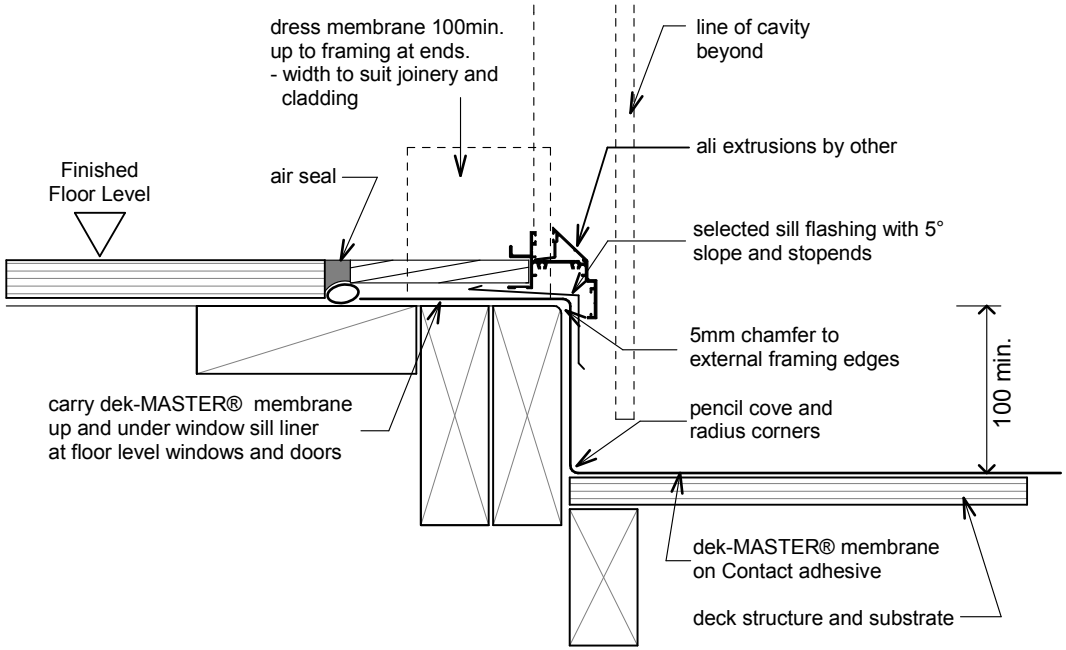

dek-M28 - Deck Al. Threshold 2

REVISION: 28 July 2014