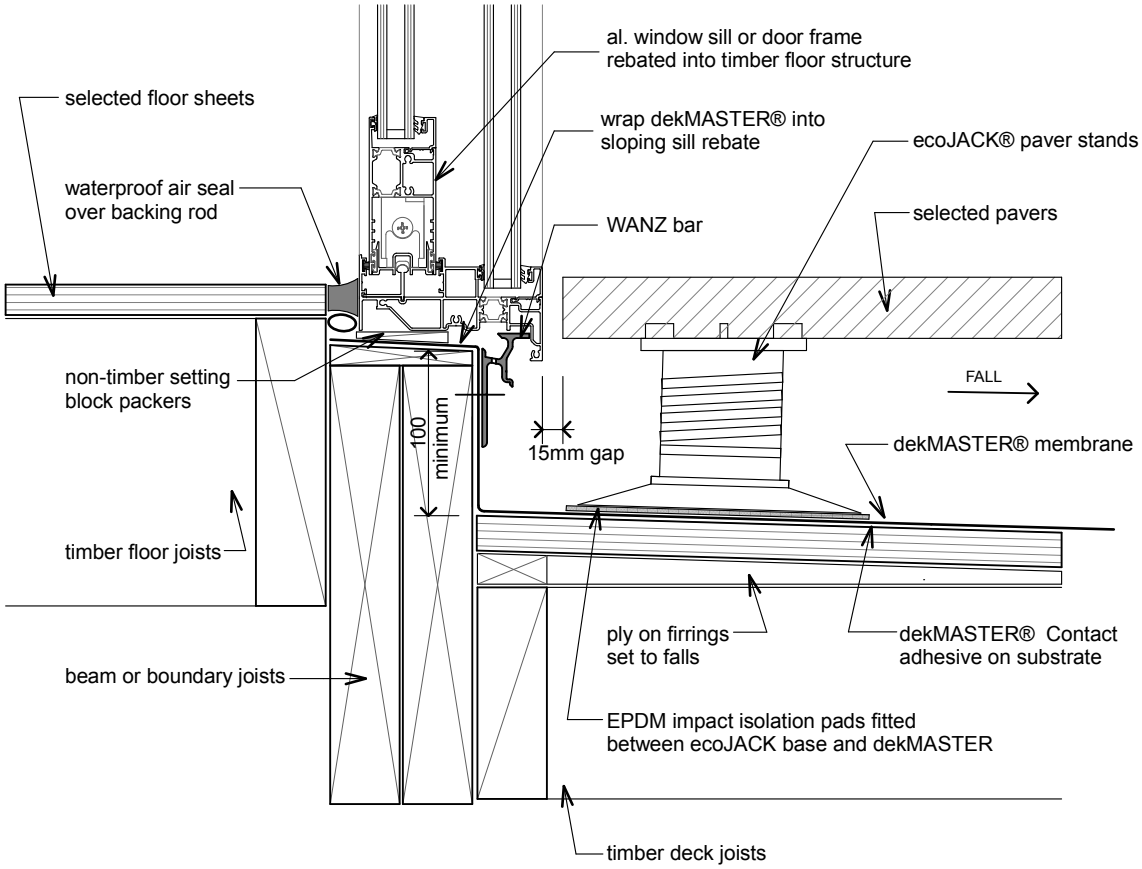

dek-M34 - ecoJACK® paver-threshold detail - type 1

REVISION: 28 July 2014