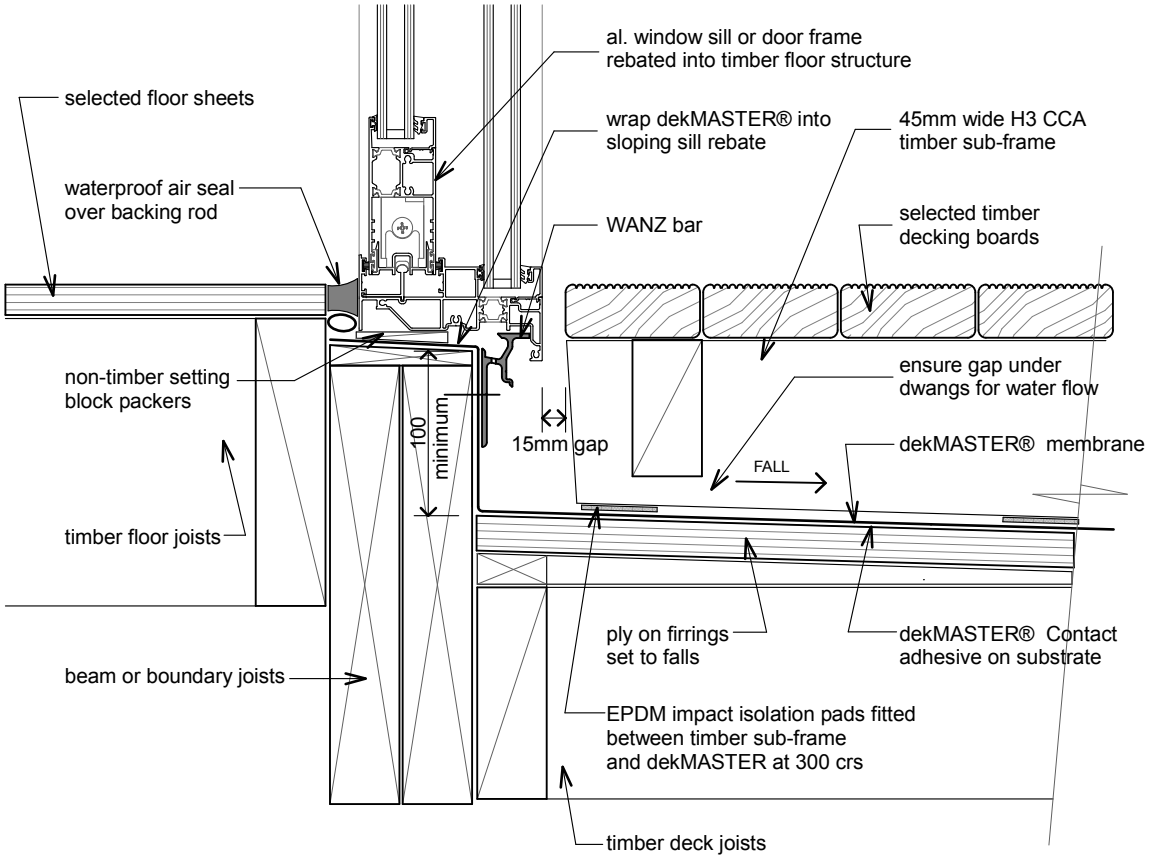


# dek-M38 - timber raft floating deck-threshold detail - type 1

REVISION: 28 July 2014