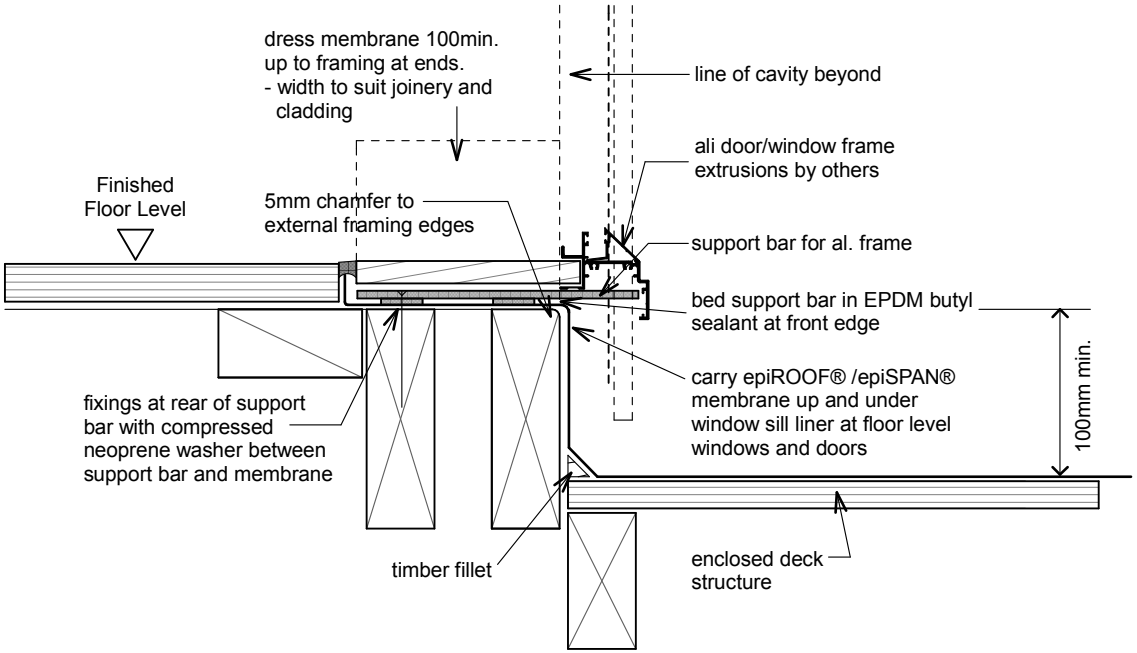

epiD04 - Deck Detail 4 - Aluminium Frame Sill (Cavity Wall)

Revision: 25 Aug 2014