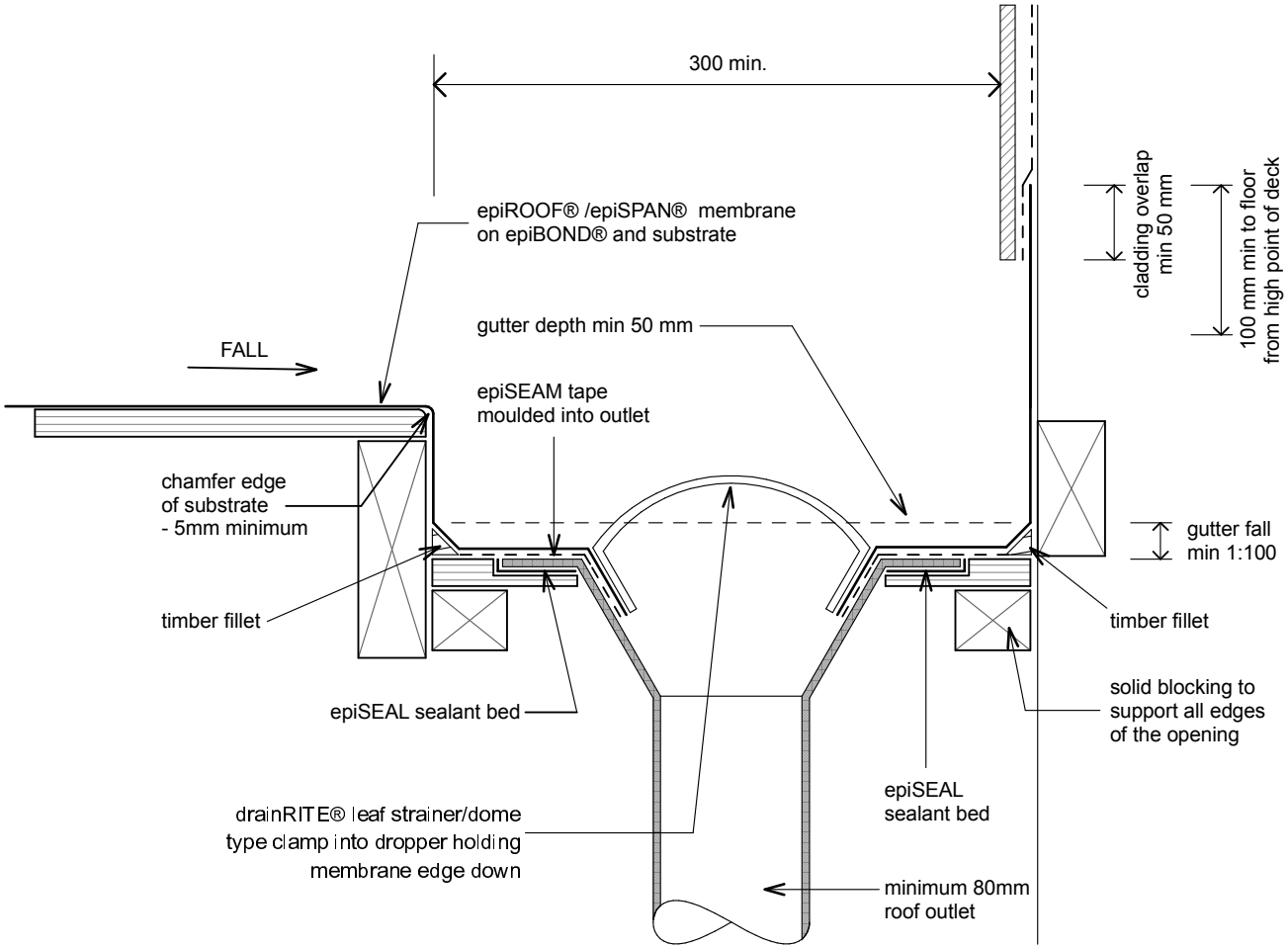

epiD06 - drainRITE® Deck Drain Type 2

Revision: 25 Aug 2014