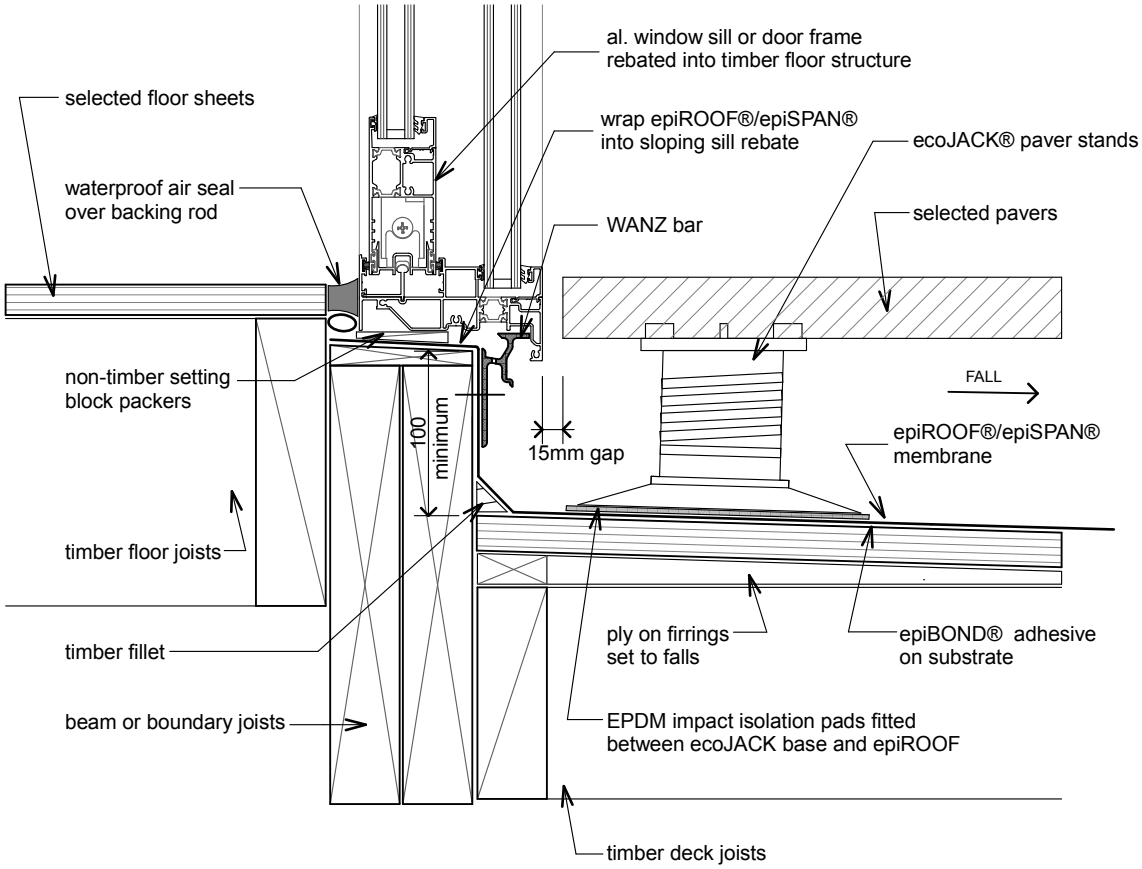


# epiD10 - ecoJACK® paver-threshold detail - type 1

Revision: 25 Aug 2014