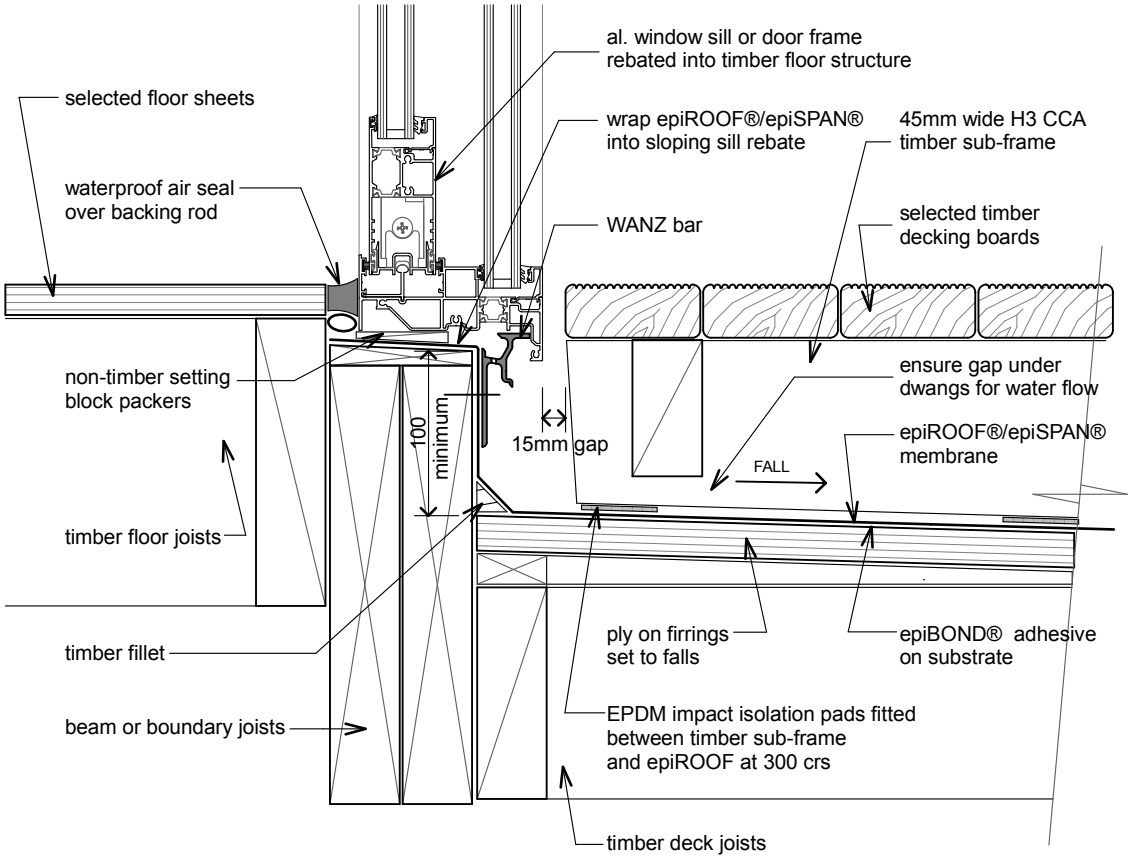

epiD14 - timber raft floating deck-threshold detail - type 1

Revision: 25 Aug 2014