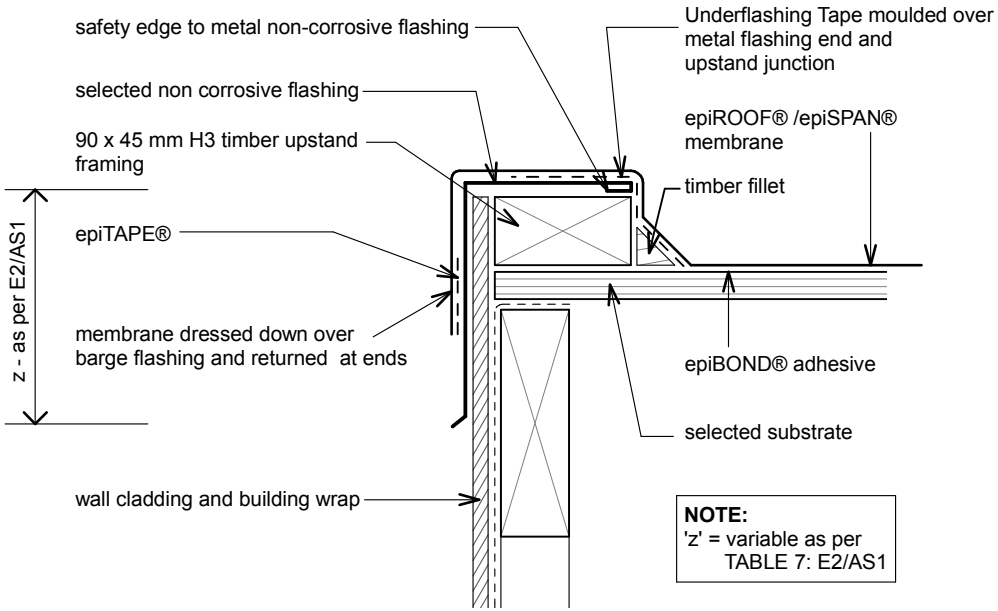

epiR03 - Barge Board type 1

Revision: 25 Aug 2014