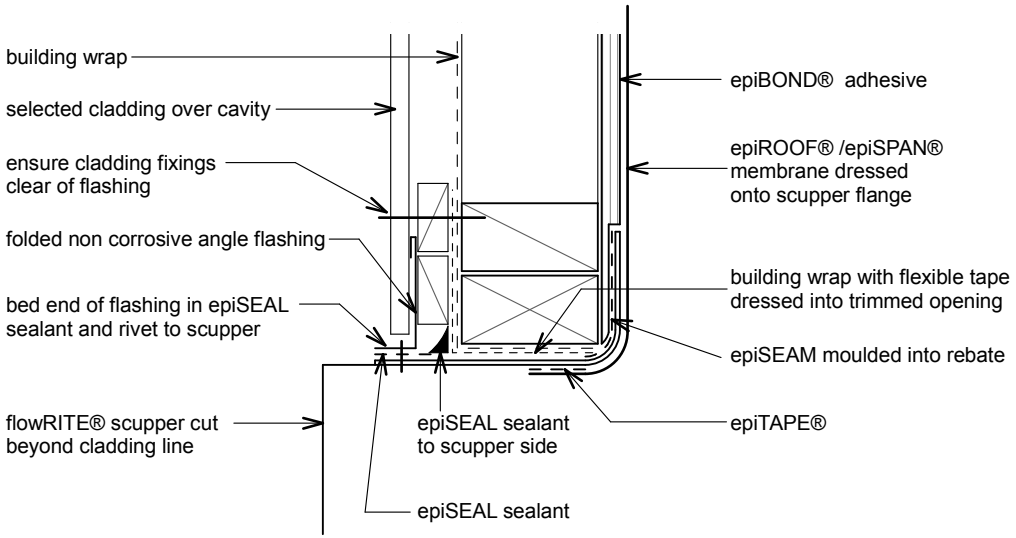

epiR06 - flowRITE® Scupper Outlet Plan 1

Revision: 25 Aug 2014