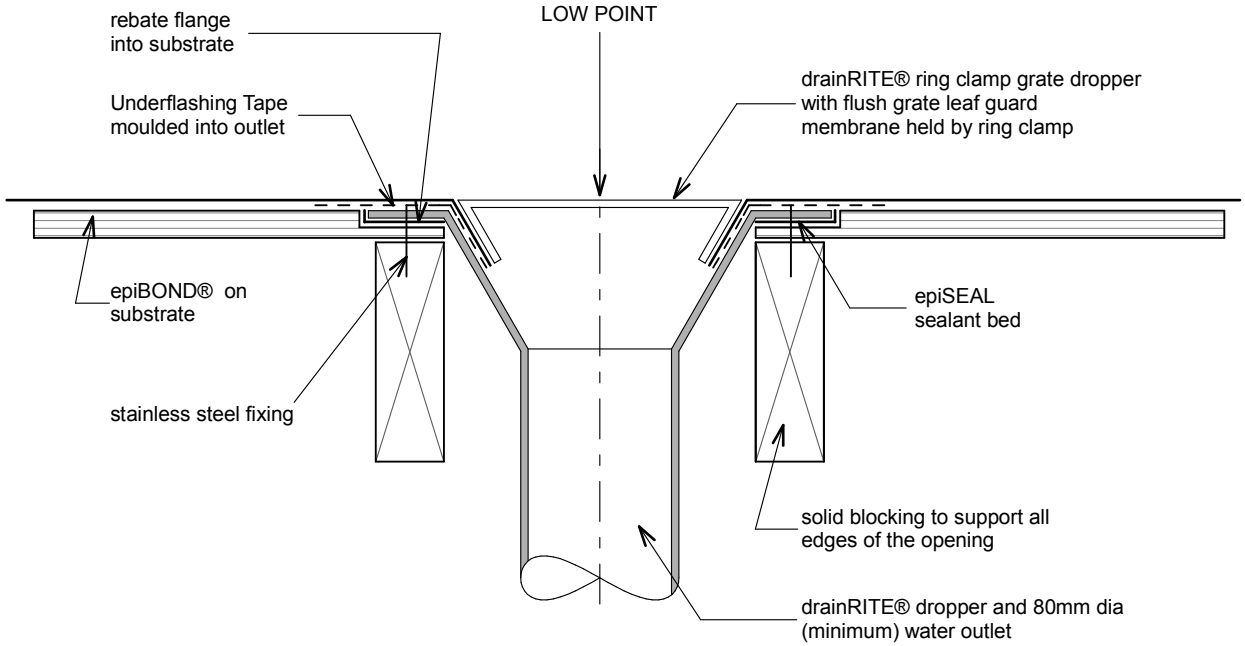

epiR14 - drainRITE Water Outlet

Revision: 25 Aug 2014